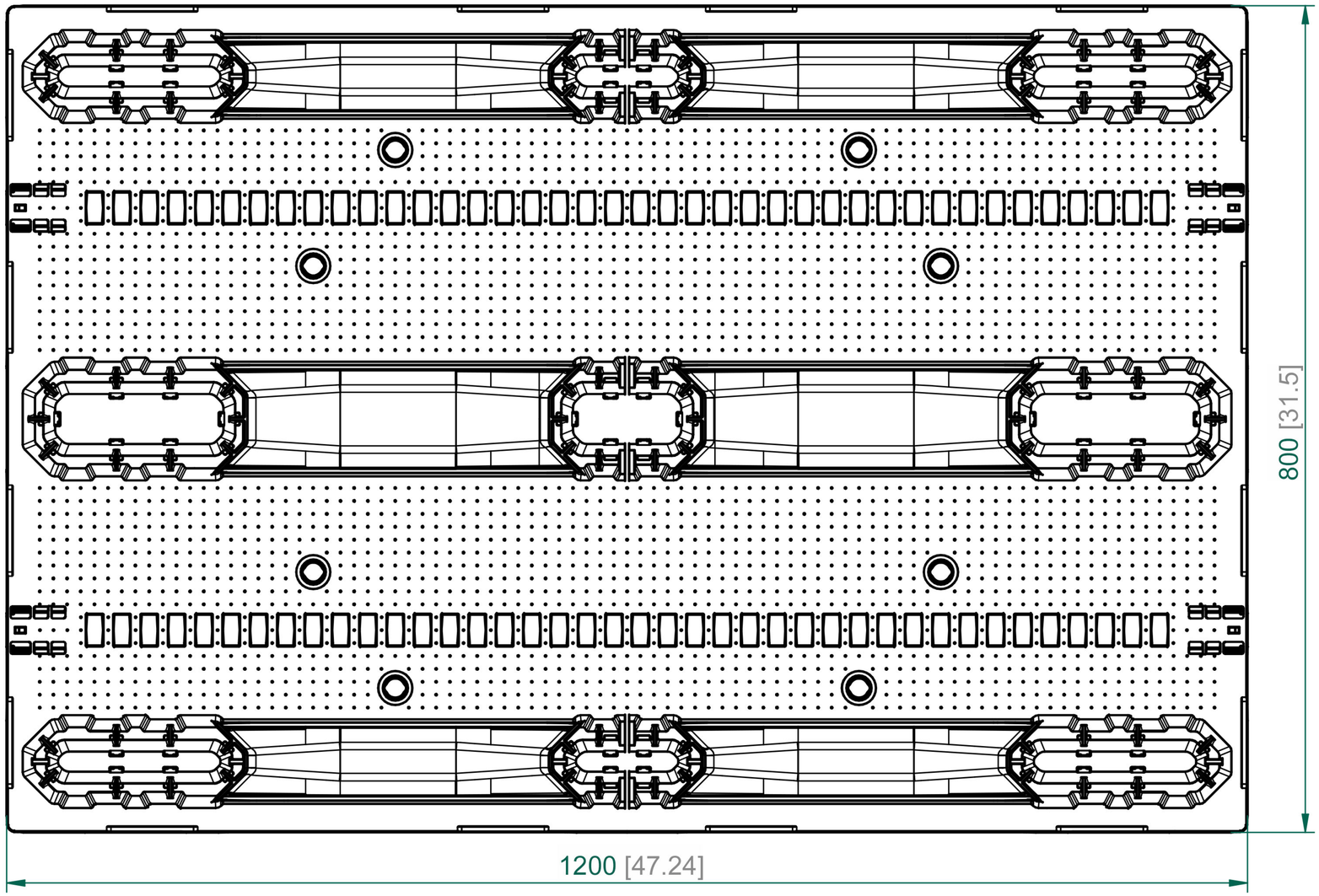

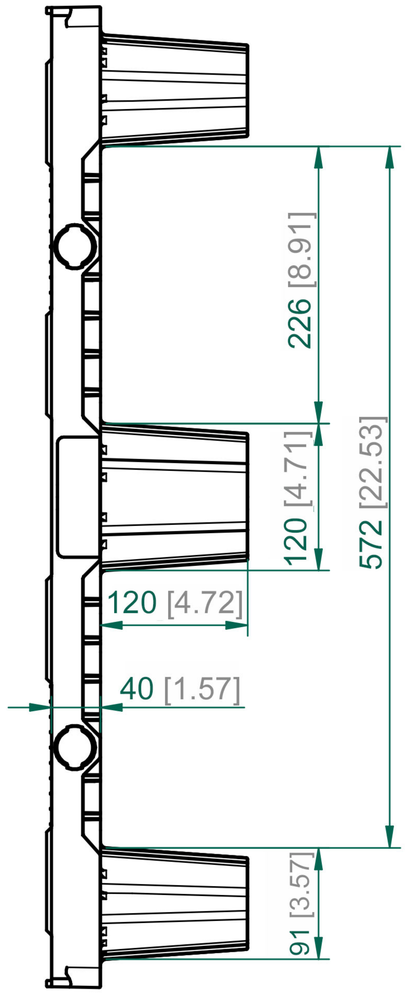

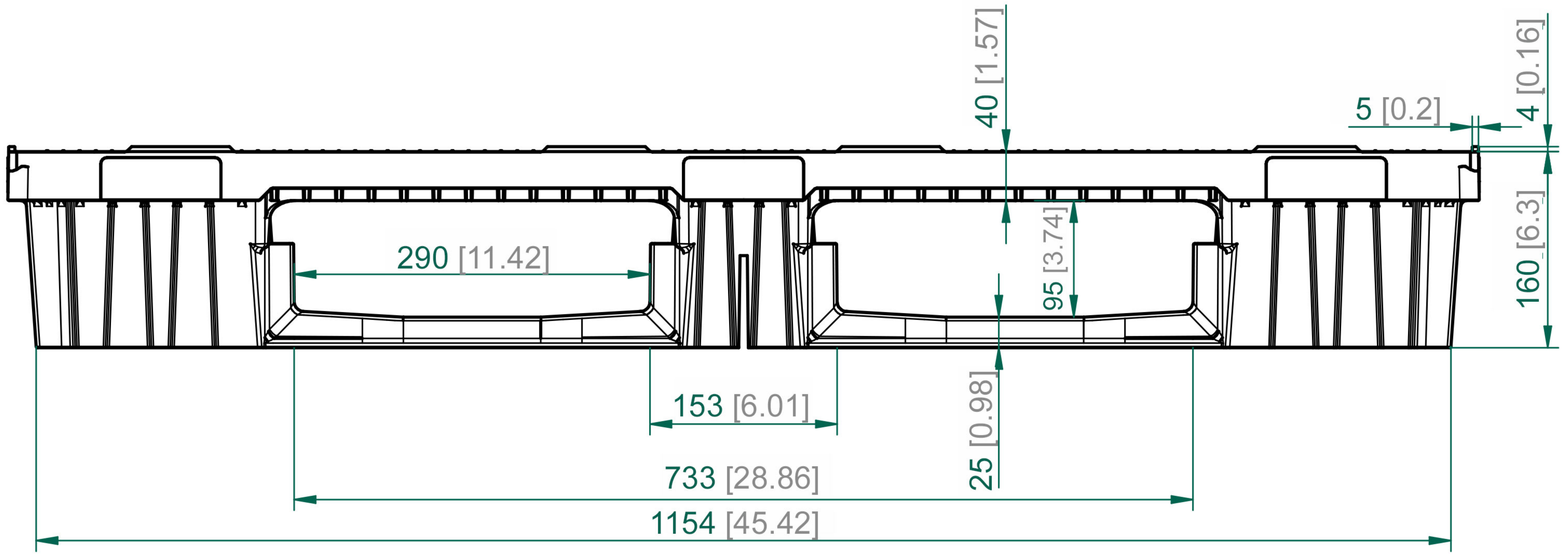

naeco RESEARCH

Title	Smart Max 1208-03
Scale 1:5	Weight 16,55 kg [36.50 lbs]

- Dimensional tolerances: DIN ISO 2768-V
- Weight tolerances: ± 4%

UNITS: mm [in]